EDS™

EXTERNAL DETECTION SENSORS

EDS-2000 DUO

QUAD PIR AND MICROWAVE K-BAND OUTDOOR SENSOR

- Up to 55 kg (120 lb) Pet immunity
- Quad Element Pyro sensor and K-Band 24 Ghz microwave (optional X-Band)
- Outstanding white light & RFI immunity
- Form A / Form C
- IP 65 Compliant
- 14m X 18m (46 ft X 60 ft) WA detection range at 1.20m (3.9 ft) installation height
- And / Or mode
- Dimensions (HxWxD): 162 x 70 x 69 mm (6.3″ x 2.8″ x 2.7″)

EDS-3000 TRIO

DOUBLE QUAD PIR AND MW OUTDOOR SENSOR

- PIR & Microwave detection
- MW - K-band or X-band
- Form A / Form C
- Coverage detection pattern of 90° adjustable within 180°
- Heavy duty polycarbonate housing
- Sealed electronics and optics
- Automatic temperature compensation
- User selectable sensitivity levels
- Adjustable time relay output
- And / Or mode
- Superior filtering against sun and white light
- Outstanding RFI immunity
- Extensive test features
- User friendly installation
- IP65 compliant
- Dimensions (HxWxD): 200 x 81 x 90 mm (7.8″ x 3.2″ x 3.5″)

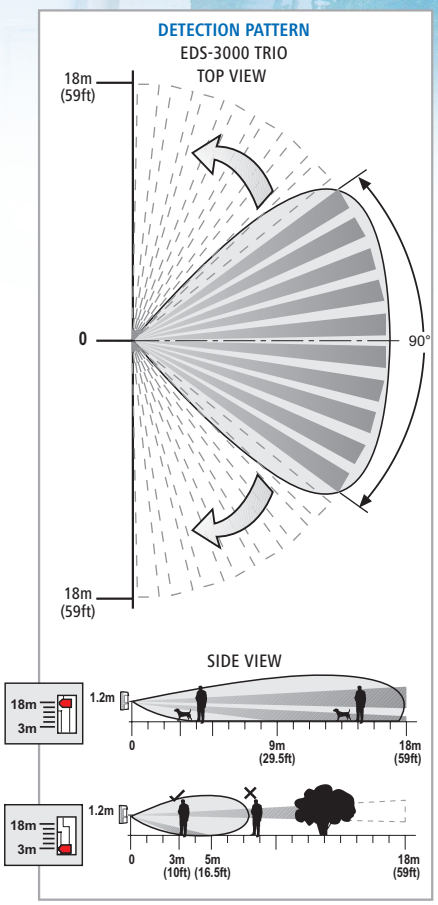

EDS™

EXTERNAL DETECTION SENSORS

EDS-4000 QUATTRO

OUTDOOR DIGITAL PIR DETECTOR WITH ANTI-MASKING

EDS-4000 Quattro is the latest detector from Crow, designed especially for outdoor installations and harsh environmental conditions.

EDS-4000 Quattro features a combination of two Double & Dual PIR detection units and an advanced digital signal processing.

EDS-4000 Quattro easily fits into any outdoor installation location with its detection units adjustable to cover separate areas up to 180º.

It offers outstanding catch performance and freedom from false alarms by excelling in overcoming the disturbances caused by an unstable outdoor environment.
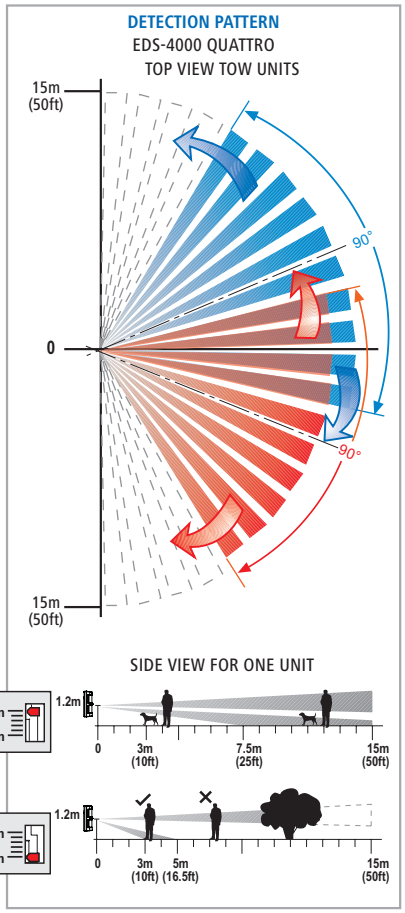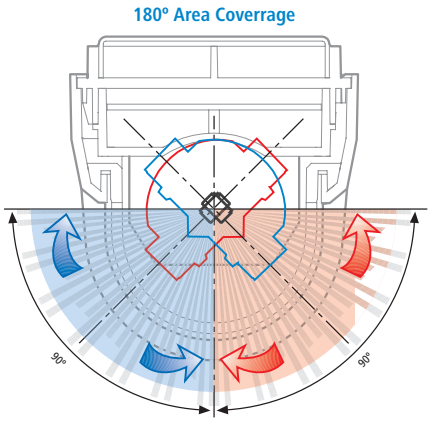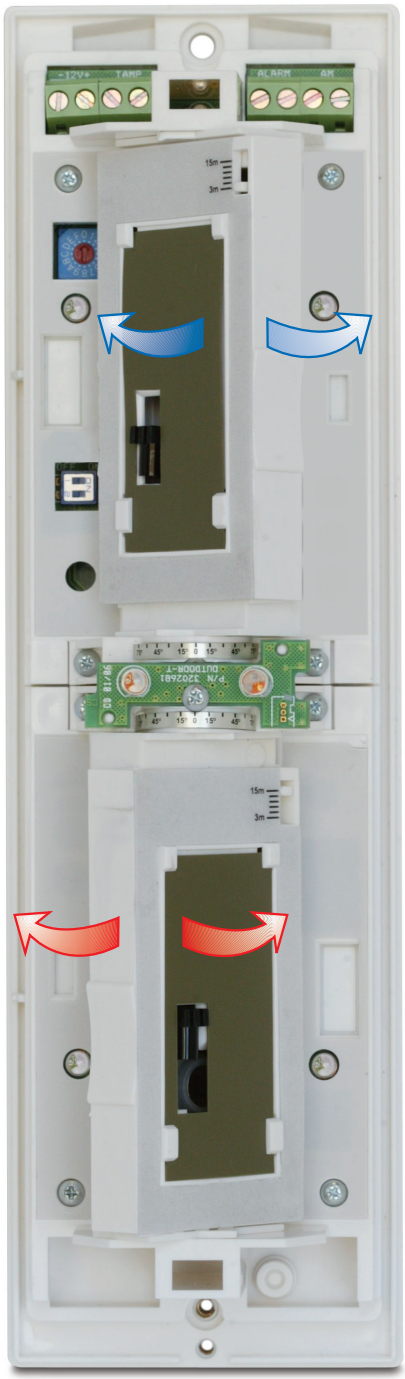
- Advanced digital processing and optical anti-masking for accurate intruder detection
- Useful for balconies, backyards, parking areas, garages, high security outdoor surroundings, warehouses and many more…
- Water, snow, rain, dust , wind and insect resistant.
- Separate 90º coverage patterns with individual relay outputs for alarm verification
- Heavy duty polycarbonate housing and sealed electronics
- Automatic temperature compensation
- User selectable sensitivity levels
- Adjustable time relay output
- Anti-Masking
- Superior filtering against sun and white light
- Extensive test features
- User friendly installation
- Grade 3 compliant
- IP65 compliant
- Dimensions (HxWxD):
  270 x 80 x 92 mm (10.6″ x 3.1″ x 3.6″)